OREGON SCIENTIFIC

DS9300

USER'S MANUAL

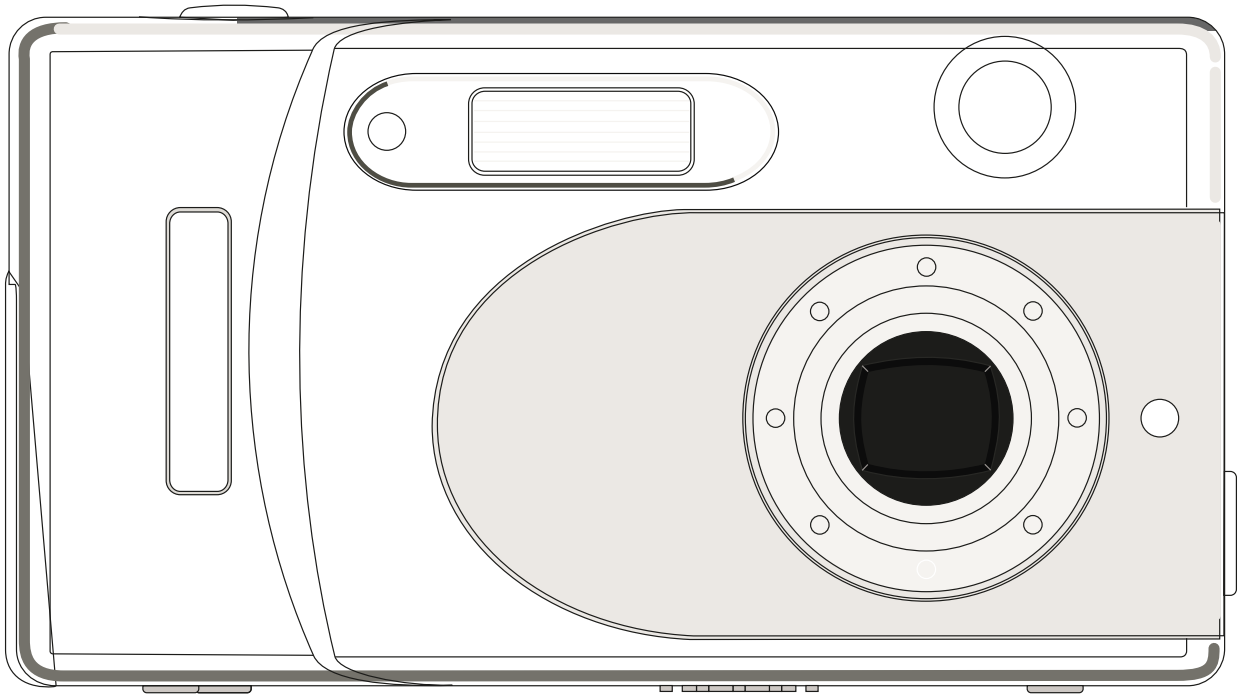

DIGITAL STILL CAMERA

3.3 MEGAPIXEL
2X OPTICAL ZOOM
2X DIGITAL ZOOM

Welcome

Thank you for purchasing the product. We strongly recommend that you read this user's manual before operating the camera. Keep the manual handy for quick reference. You are on your way to experiencing a digital camera like no other. This easy-to-follow user's manual shows you how to use your new camera like a pro, whether you want to:

- download photos to your computer,
- preview and take images via the television.
- create a mini movie using the live video feature.

Before using the camera, please ensure that you:

- Read and understand the user's manual.

- Check the contents to make sure that all of the components are included.

- Check that your camera is recording the images correctly by taking a number of test shots.

- If your camera is used for a prolonged period, the camera body may become warm. Please be aware of this and take care when operating the camera.

Table of Contents

CHAPTER 1: Components Guide

The Camera Kit 1
Index of Controls (Front / Left / Back / Up / Bottom View) 2
On Screen Display (OSD) 7

CHAPTER 2: Getting Started

Attaching the Strap 9
Turning the Power On/Off 9
Installing the Batteries 10
Inserting / Removing a Security Digital Card 11
The Memory Priority 12
Setting the Language (abc) 12

CHAPTER 3: Basic Photography

Taking Pictures (Auto Focus) 13
Adjust the zoom
Press the shutter button

Taking Pictures (Manual Focus) 15
Switching the LCD Monitor Display Information ( ) 16
Using the Flash (/ /) 17
Using the Self-Timer ( ) 17
Using the Macro ( ) 18
Adjusting the Exposure Compensation 18

Table of Contents

CHAPTER 4: Advanced Features Photography

Capture Mode (/ /) 19
Scene Mode (/ / / / /) 20
Delete Mode (/) 22
Resolution ( ) 24
Compression Ratio (/ /) 24
Exposure Time ( ) 25
Sharpness / Softness ( ) 25
Light Metering Mode ( ) 26
Communication Setting ( ) 27
Setting the ISO ( ) 27
Beeper On/Off (/) 28
Auto Power Off ( ) 28
Monitor Brightness ( ) 29
Setting the Date and Time ( ) 29
Setting the TV System ( ) 30
Reset Definition ( ) 30
Setting the Focus before Using the Self-Timer ( ) 31
Assist Focus ( ) 31

CHAPTER 5: Viewing the Images

Switching between Capture and Replay Mode 32
Multi-Image Replay( ) 32
Auto Playback 33
The Zoom in the Replay Mode 33
Erasing the Single Image 34
Protecting Images( ) 34
Playing Back Movies 35

Table of Contents

CHAPTER 6: Capturing / Replaying with a TV Monitor

Connecting the Camera with a TV Monitor 36
Capturing the Images with a TV Monitor 36
Replaying the Images with a TV Monitor 37

CHAPTER 7: Installing the USB DISK Driver

For Windows 98 only 38

CHAPTER 8: Download Images via USB DISK 40

CHAPTER 9: Appendix

Troubleshooting 42
Additional Information 45

The Camera Kit

The camera kit includes:

1. The camera
2. AA alkaline batteries (x2)
3. Camera strap
4. Mini USB cable
5. User's manual
6. CD
7. Video cable
8. Quick start guide

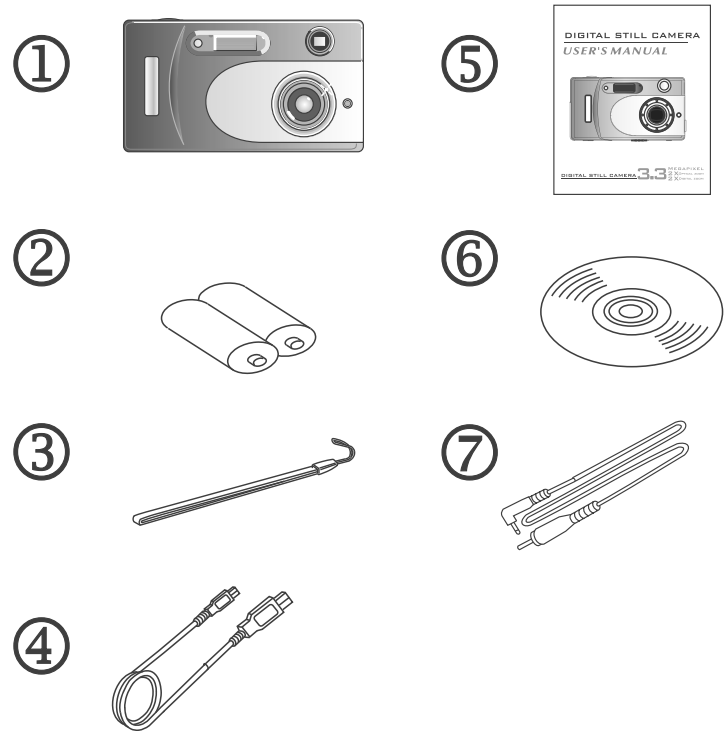

This is not your traditional camera. This is a digital camera that allows you to take pictures without the use of film. With this camera, going digital is just the beginning. Before going into creating fun projects with the camera, familiarize yourself with the cameras features and functions.

Index of Controls (Front/Left/Back/Up/Bottom View)

Front View

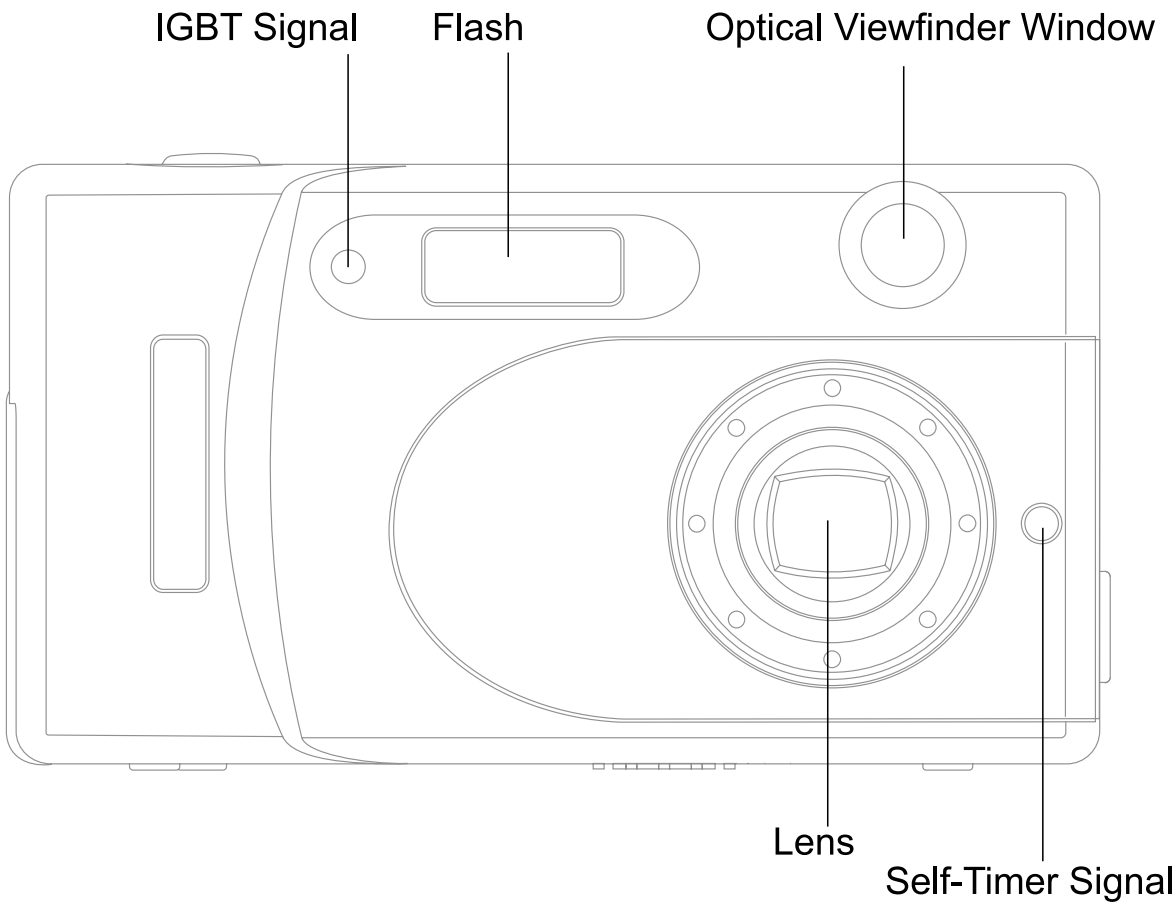

Index of Controls (Front/Left/Back/Up/Bottom View)

Left View

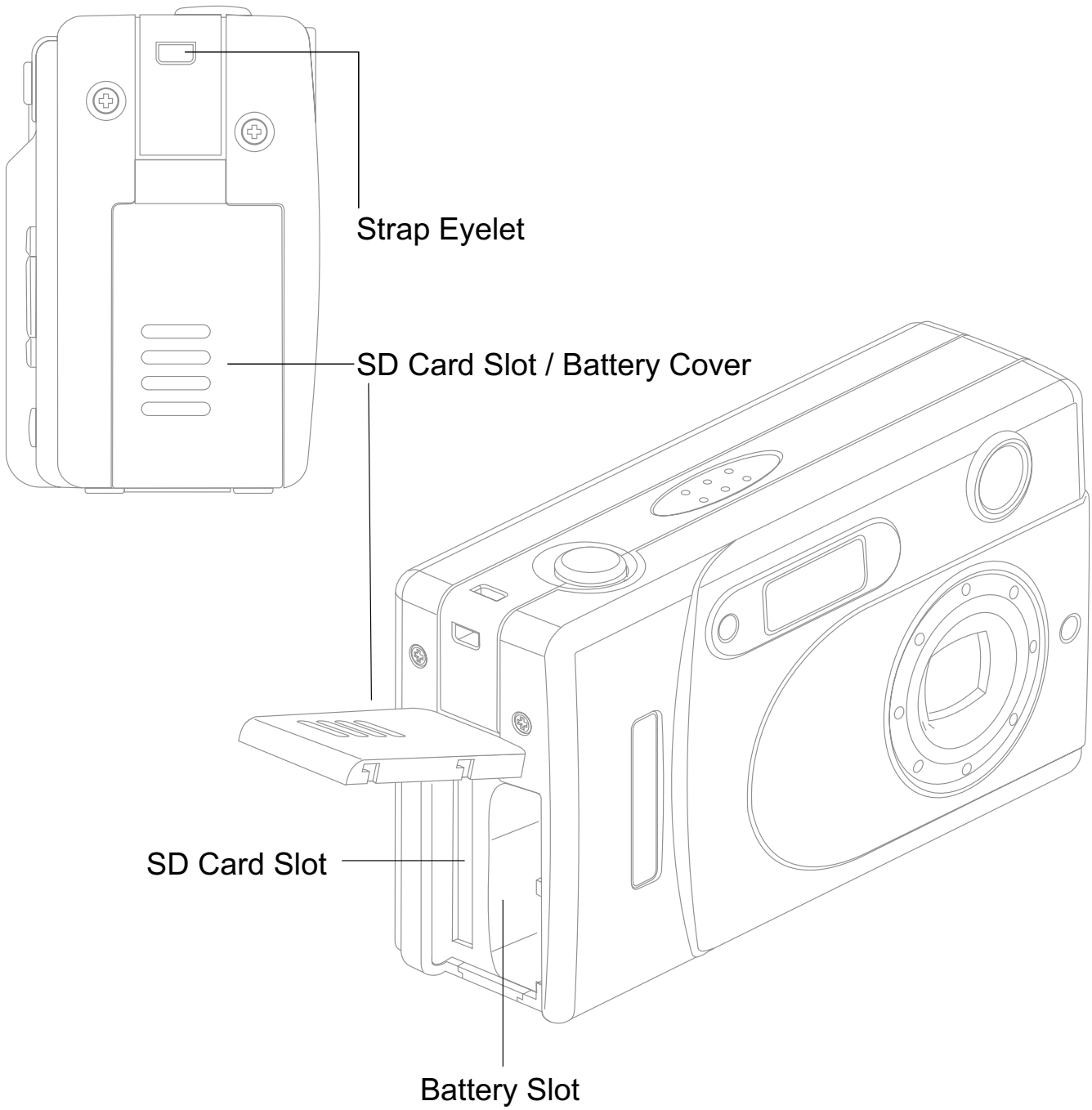

Index of Controls (Front/Left/Back/Up/Bottom View)

Back View

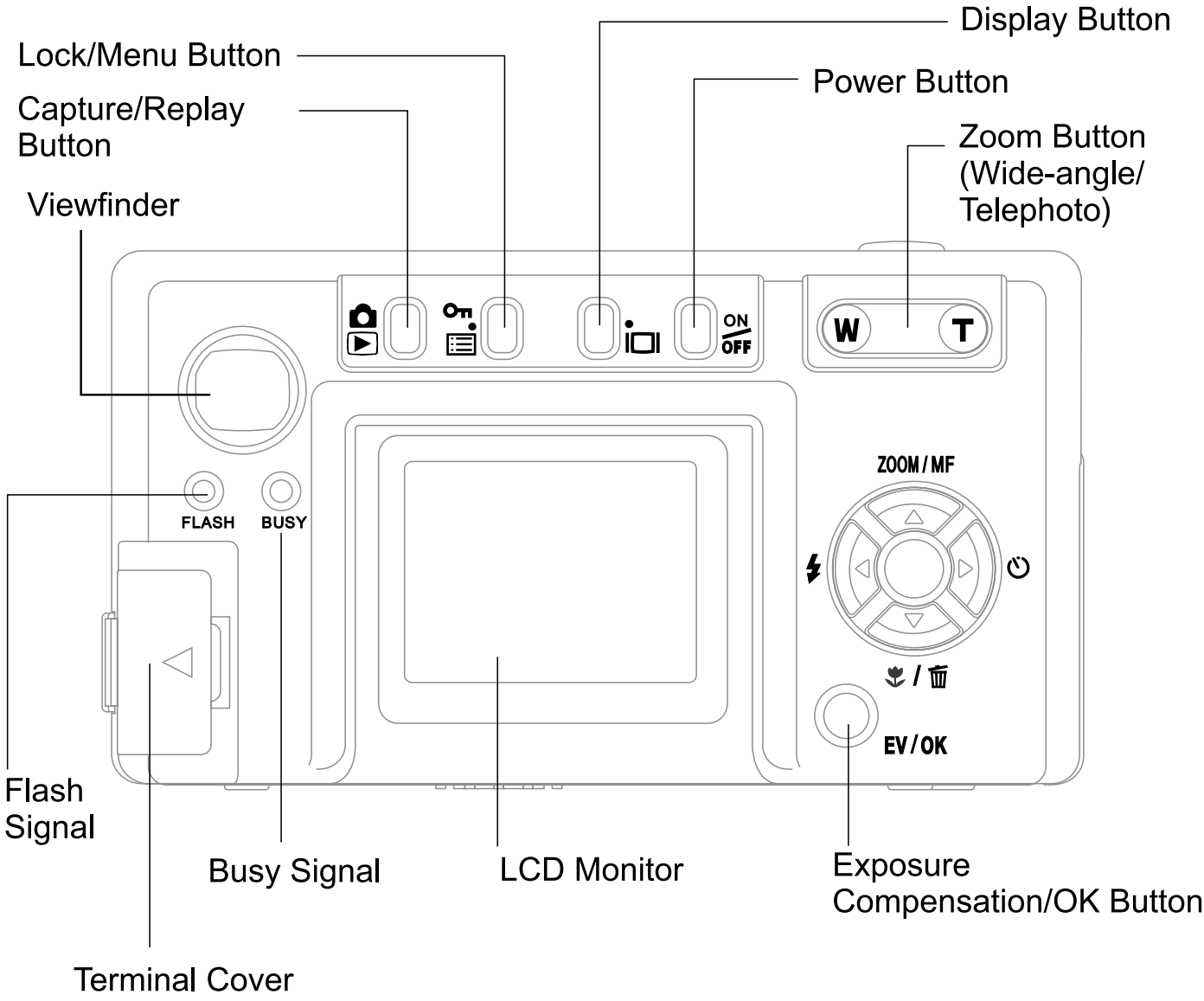

Index of Controls (Front/Left/Back/Up/Bottom View)

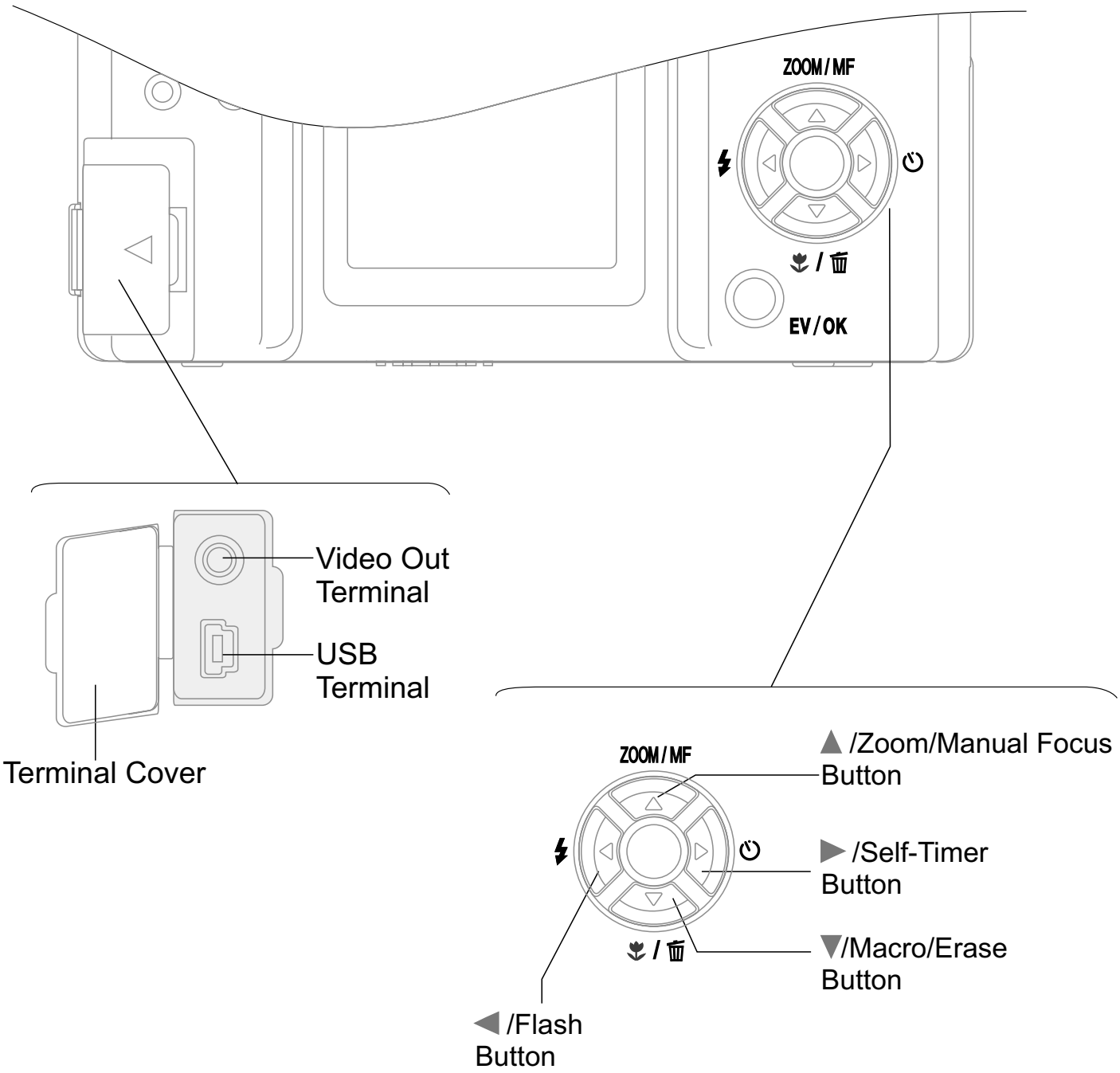

Index of Controls (Front/Left/Back/Up/Bottom View)

Up View

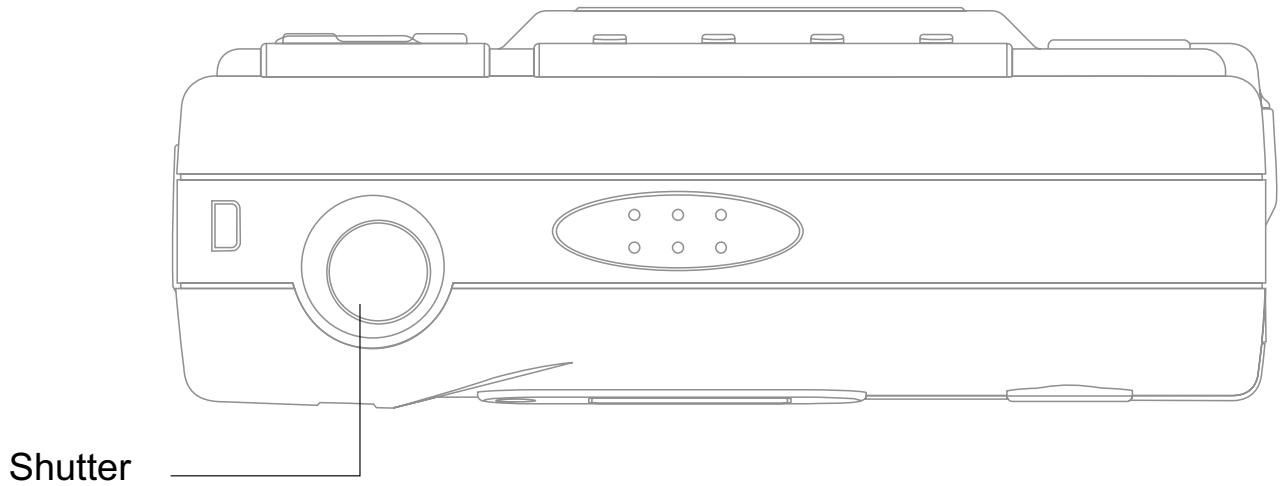

Bottom View

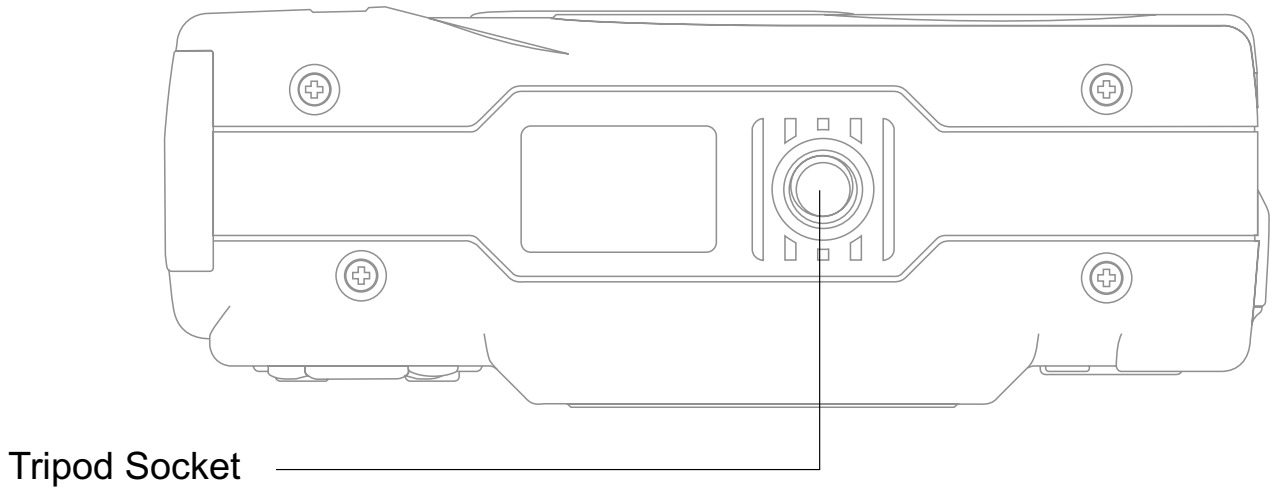

On Screen Display (OSD)

Capture Mode

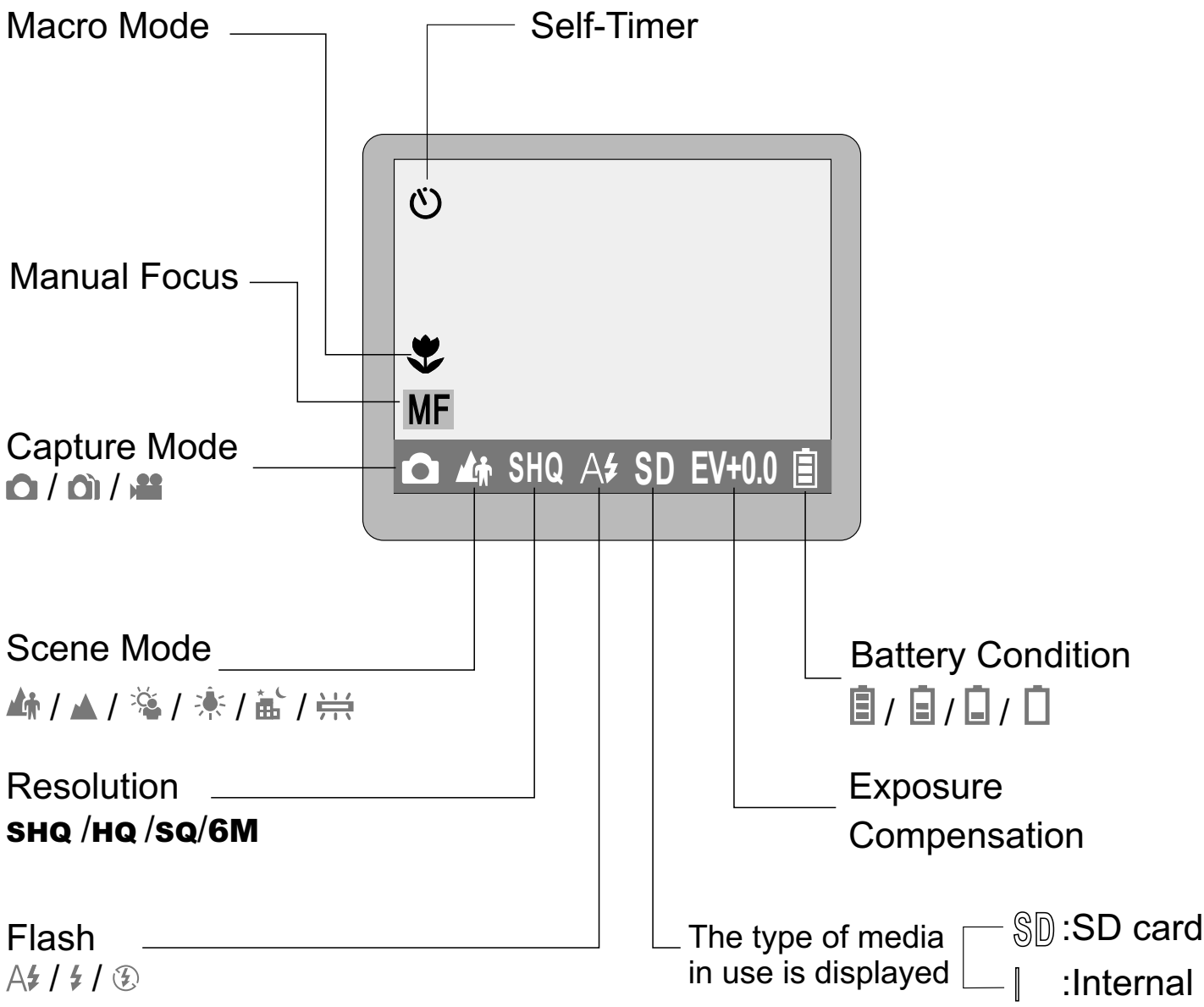

On Screen Display (OSD)

Capture Mode

Press " " button to capture photos.

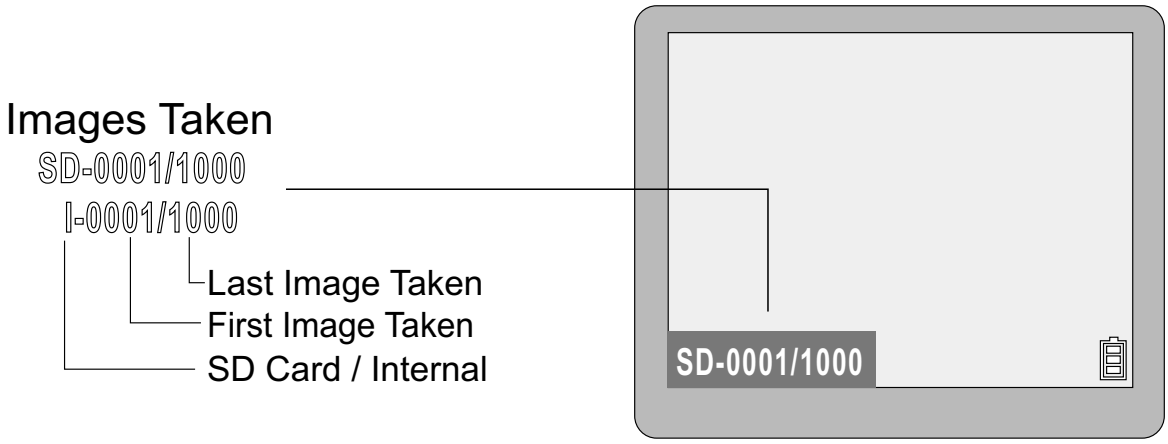

Replay Mode

Press " " button again to replay. Use the "▲", "▼","◀" and "▶" button to select the photo. Press "EV/OK" button to enlarge photo.

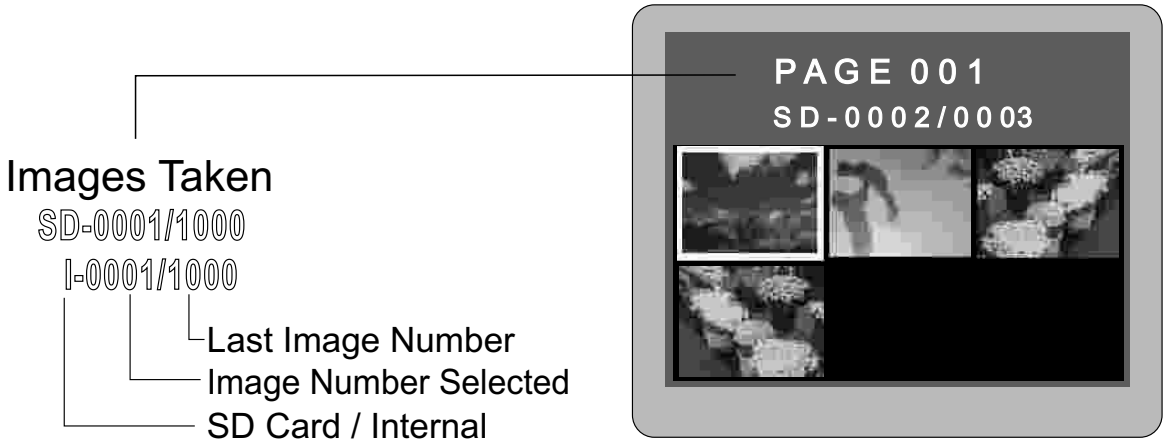

Attaching the Strap

Attach the camera strap as shown in the illustration below.

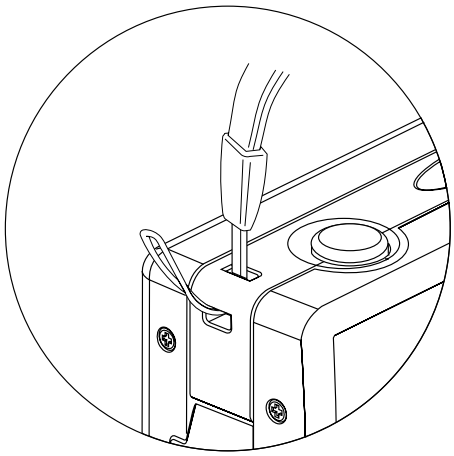

Figure1

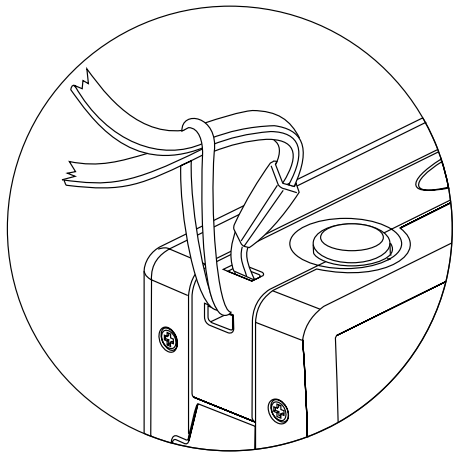

Figure2

Turning the Power On/Off

Press " ON/OFF " button to turn the camera on.
Press " ON/OFF " button 3 seconds to turn the camera off.

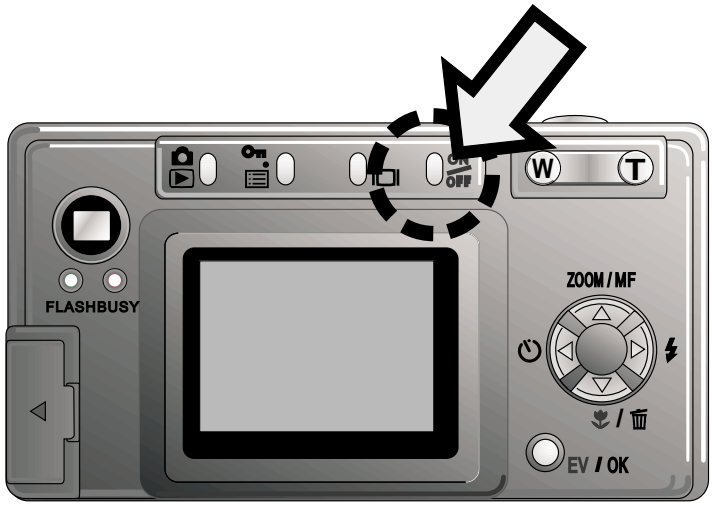

Installing the Batteries

1. Open the SD card slot/battery cover in the direction of the arrow.
2. Put the batteries in.
3. Clock the cover.

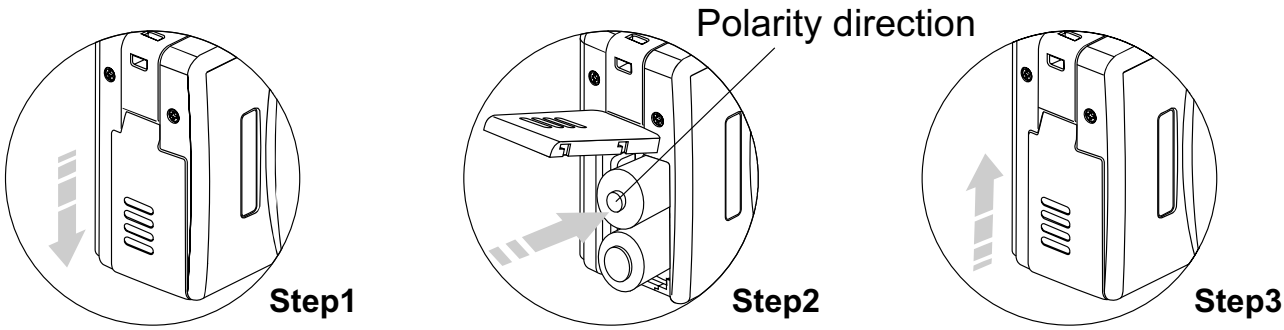

NOTE

1. We recommend the use of NI-MH batteries, which have longer lives than alkaline batteries. NI-MH batteries are rechargeable, alkaline batteries are not.
2. Remove the batteries if you aren't going to use the camera. Don't short,disassemble or throw the batteries into a fire.

Battery Condition

As the battery is depleted, the indication changes as follows.

Full —— **Low** —— **Empty**

Power is running out, change the batteries.

Inserting / Removing a Security Digital Card

1. Turn off the camera.
2. Open the SD card slot/battery cover.

NOTE

The SD card is optional, you can purchase at your local retailer.

3. Inserting the card

Orient the SD card correctly and push it into the card slot as far as it will go.

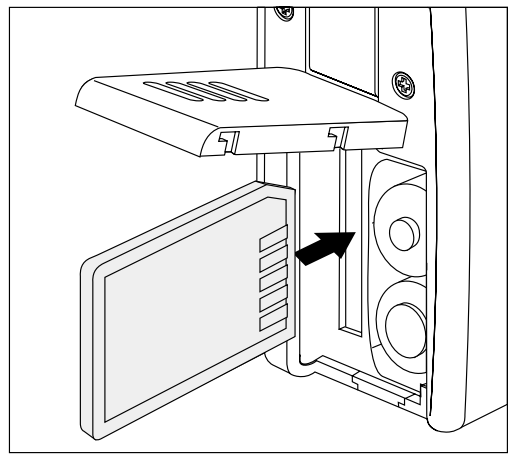

NOTE

Note the orientation of the card. If it inserts incorrectly, it may become jammed.

4. Removing the card

4-1. Push the card into the card slot slightly and allow it to eject back out.

4-2. Grasp the card and pull it straightly out.

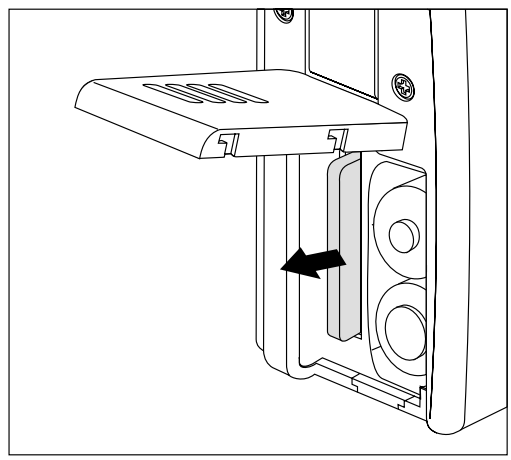

NOTE

Never remove the card while the camera is turned on. It will destroy the image data or damage the card itself.

The Memory Priority

You can store image data with an external SD card or internal memory in the camera. As the SD card is inserted into the camera, the image data will be recorded or viewed or downloaded into the SD card first. Only if the SD card is removed from the camera will the image data be recorded or viewed or downloaded into the internal memory of the camera.

Setting the Language (abc)

You can select from 9 different languages:
Traditional Chinese / English / German / French / Italian / Spanish / Portuguese / Dutch / Polish

1. Press "☰" button to display the menu.
2. Use "▲"or "▼" button to select this mode (abc)
3. Use "◀"or "▶" button to select the language.
4. When you have finished setting, press "☰" button to exit.

Taking Pictures (Auto Focus)

1. Press " ON/OFF " button. The camera will beep.
2. Aim the camera at the subject.

3. Adjust the zoom

3-1. Use the zoom lever to achieve the desired composition.

3-2. To zoom in on the subject, press the "**T**" button. To zoom out press the "**W**" button. The zoom bar appears on the LCD monitor when you zoom in or out. Zooming stops briefly when the camera switches between optical zoom and digital zoom.

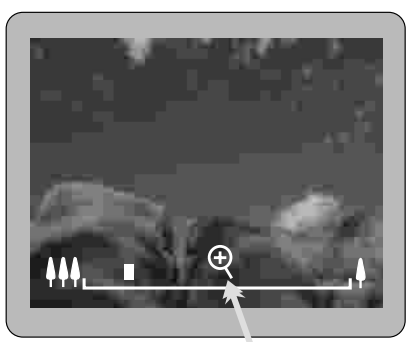

The zoom in or zoom out will stop briefly here. Press "**T**" or "**W**" button again to switch between optical and digital zoom.

NOTE

TO USE THE DIGITAL ZOOM

Use the optical zoom to zoom in fully and then press "T" button again. Digital zoom cannot be used as the LCD monitor is turned off.

TO USE THE OPTICAL ZOOM

Use the digital zoom to zoom out fully and then press "W" button again.

4. Press the shutter button

4-1. Press the "shutter" button down half way. The color of the focus frame will be red.

4-2. When the camera has finished metering, the color of the focus frame will be green.

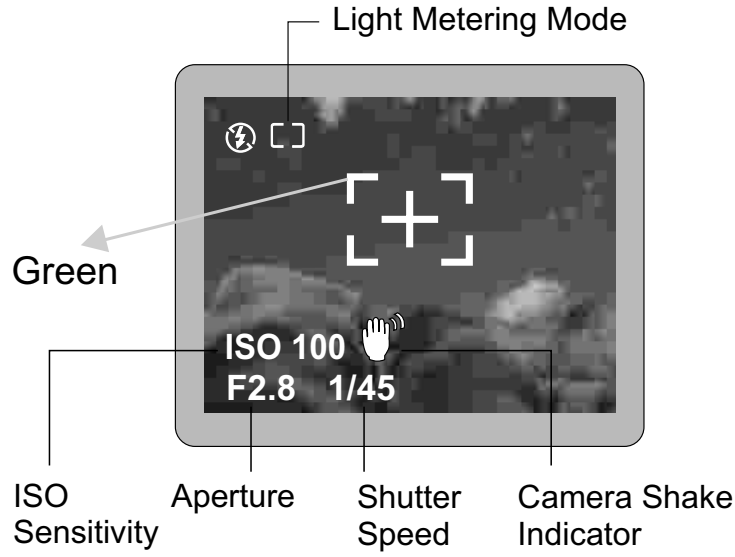

4-3. Then press the "shutter" button down fully to take the picture. The camera beeps and the data is then recorded.

NOTE

The " " appears on the LCD monitor when the shutter speed ≥1/45 second. Please use the tripod to steady the camera.

Taking Pictures (Manual Focus)

1. Press "ON/OFF" button. The camera will beep.
2. Press "▲" button until "MF" icon appears on the monitor.
3. Use the zoom lever (**T** or **W button**) to focus the subject.
4. Use the LCD monitor to check the focus.
5. Press the “shutter” button down fully to take the picture. The camera beeps and the data is then recorded.

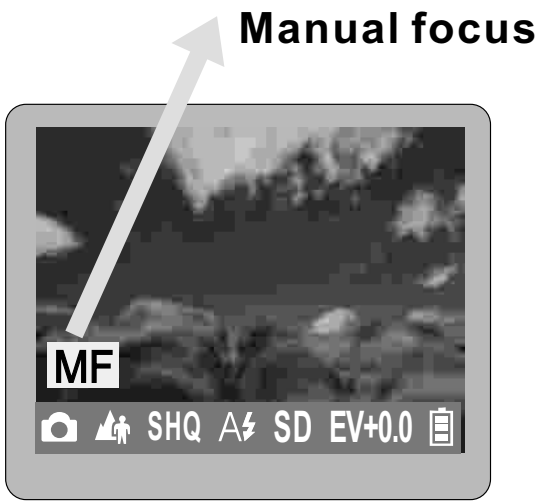

NOTE

When you select the manual focus mode, the "MF" icon appears on the LCD monitor. Press "▲" button again to cancel the manual focus mode.

Switching the LCD Monitor Display Information (▭)

Pressing "▭" button switches the LCD monitor display information. In the capture mode, pressing "▭" button cycles the LCD monitor to the next mode each time the button is pressed.

Detailed Display:
The LCD monitor displays information such as the camera setting, resolution, battery condition.....

Simple Display:
The LCD monitor only displays remaining image capacity.

No Information Display:
The LCD monitor displays no information on it.

Monitor Off:
Turn of the monitor.

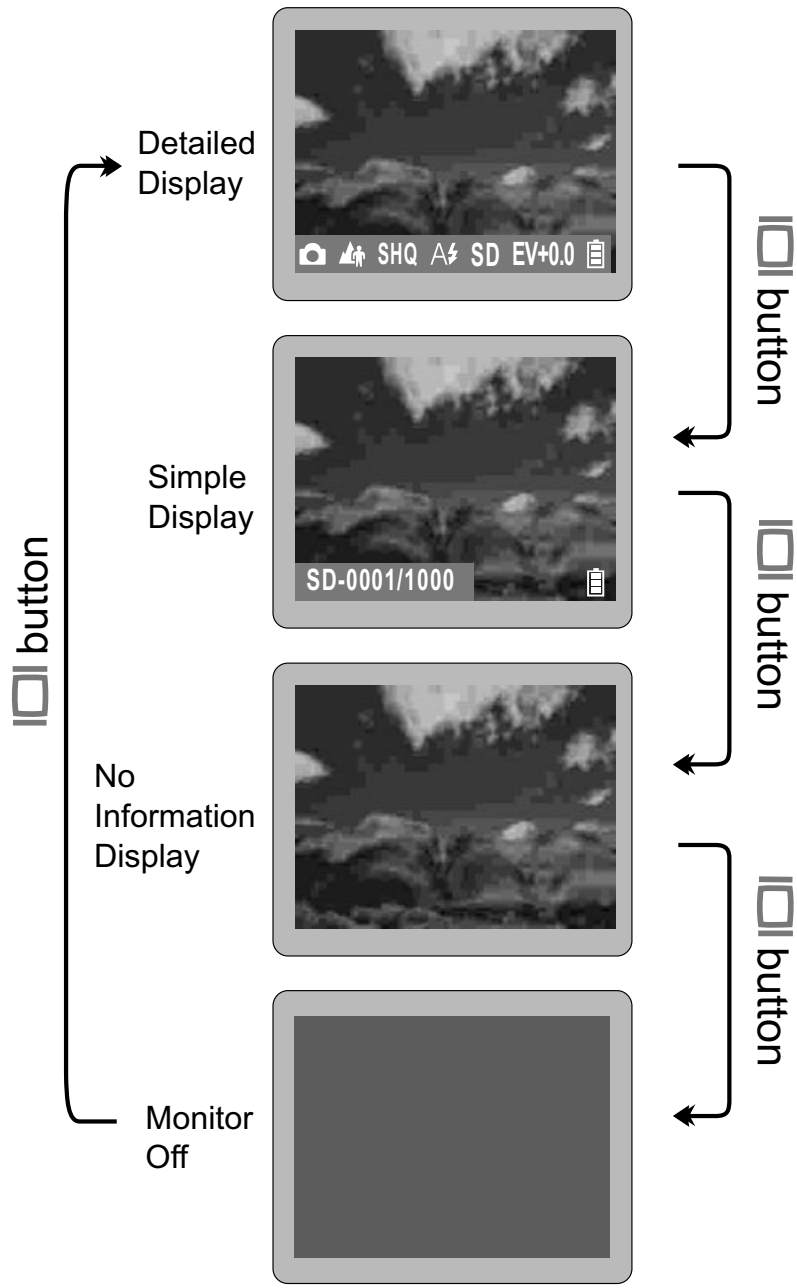

NOTE
Digital zoom cannot be used if the LCD monitor is turned off.

Using the Flash (A⚡ / ⚡ / ⊘)

The flash mode is used to add extra light to your image. Press "⚡" button to select the flash setting. The flash setting changes (A⚡, ⚡ , ⊘) each time you press "⚡" button. And the selected flash mode appears on the LCD monitor.

NOTE

A⚡ : Auto Flash Mode ⚡ : Forced Flash Mode ⊘ : No Flash Mode

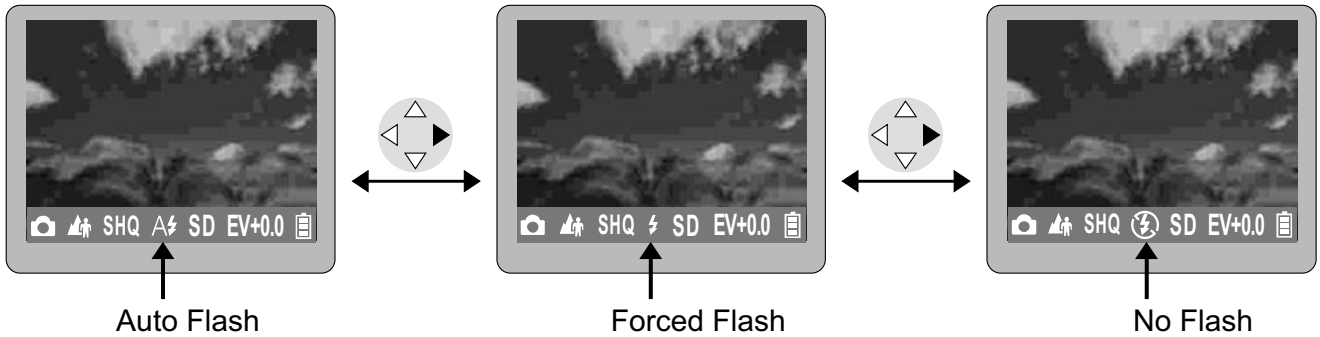

Using the Self-Timer (⏲)

This is used to take a picture with a 10 seconds delay.

1. Press "⏲" button to select the self-timer setting. The "⏲" icon appears on the LCD monitor.
2. Take the picture by pressing the **"shutter"** button. You have 10 seconds which is indicated by the camera beeping and the self-timer indicator blinking on the front of the camera.
3. You can set the focus before using the self-timer. Please see p.31 for more details.

NOTE

Press "⏲" button again to cancel this mode.

Using the Macro ( )

1. The macro mode is used to shoot close-up of subjects in the range of 6 cm to 40 cm. Press" "/ " " button and " " icon appears on the LCD monitor.
2. Shoot the image.

NOTE

Press " "/ " "button again to cancel the macro mode.

Adjusting the Exposure Compensation

Adjust the exposure compensation setting to obtain the optimum image brightness (Exposure) when the subject is much brighter or darker than the background.

1. Press "EV/OK" button to get into the EV mode. The exposure compensation bar will appear on the LCD monitor.
2. Press "◀"or "▶" button. The brightness of the subject will be adjusted according to the exposure value. You can see the change on the LCD monitor.
3. Press "EV/OK" button to exit.

NOTE

The settings can be adjusted in 1/2 steps in the range of -2.5EV~+2.5EV. The higher the value, the greater the exposure (brightness).

Capture Mode (/ /)

In the capture mode, you can choose from 3 types of shots:
Single Shot / Continuous Shots / Recording

1. Press "" button to display the menu.
2. Use "▲"or "▼" button to select this mode ( )
3. Use "◀"or "▶" button to select or or .
4. Press "" button to confirm setting.
5. The selected mode will appear on the LCD monitor.

Single Shot	Continuous Shots
Use this mode to shoot single shot. 1. Press the "shutter" button to take a picture.	Use this mode to capture continuous shots. 1.Press the "shutter" button to take the pictures. * Take up 3 pictures in super fine resolution at one time. * Take up 6 pictures in fine resolution at one time. * Take up 12 pictures in normal resolution at one time.
Recording	
Use this mode to recording a short movie. 1. Press the "shutter" button to start recording. 2. Press the "shutter" button again to stop recording. * The available shooting time depends on the amount of free space on the media.	

Scene Mode (/ / / / /)

In the scene mode, you can choose from 6 types of scenes:
Portrait / Landscape / Back Light / Tungsten / Night Landscape / Fluorescent

1. Press "" button to display the menu.
2. Use "▲"or "▼" button to select this mode ( )
3. Use "◀"or "▶" button to select or or or or or or. As the scene type is selected, press "" button again to exit the menu.
4. The selected mode will appear on the LCD monitor.

Portrait	**Landscape**
Use this mode for shots of people. 1. Press the "shutter" button to take a picture. **NOTE** **Use this mode for normal, everyday use.**	Use this mode for daytime shots of scenery. 1. Press the "shutter" button to take a picture.
Back Light	**Tungsten**
Use this mode for shots in back light. 1. Press the "shutter" button to take a picture.	Use this mode for shots in incandescent light. 1. Press the "shutter" button to take a picture.

Night Landscape	Fluorescent
Use this mode for shots taken in the evening or at night. 1. Press the "shutter" button to take a picture.	Use this mode for shots in fluorescent light. 1. Press the "shutter" button to take a picture.

Delete Mode (/)

In the delete mode, no matter what type of media (SD card / Internal memory) you set, you can choose from 2 types of this mode:
Delete All / Format

Delete All (In a SD card)

1. Make sure the SD card is in the camera.
2. Press "" button to display the menu.
3. Use "▲"or "▼" button to select this mode ()
4. Use "◀"or "▶" button to select "" in higher level.
5. Press "EV/OK" buton.
6. Select "**Yes**" using "◀"or "▶" button.
7. Press "EV/OK" button to delete all the images.

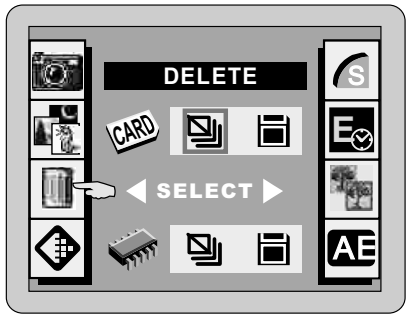

NOTE

Locked images can not be deleted

Format a SD card

1. Make sure the SD card is in the camera.
2. Press "" button to display the menu.
3. Use "▲"or "▼" button to select this mode ()
4. Use "◀"or "▶" button to select "" in higher level.
5. Press "EV/OK" button.
6. Select "**Yes**" using "◀"or "▶" button.
7. Press "EV/OK" button to format the card.

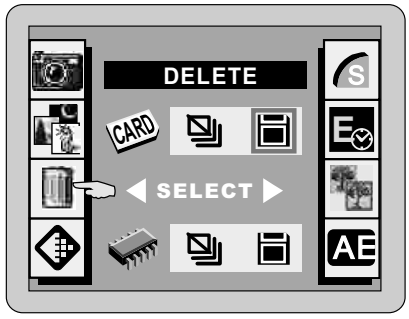

Delete All (the internal memory)

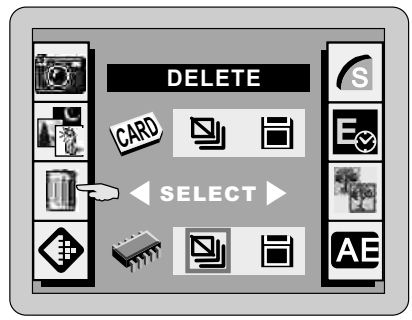

1. Make sure the SD card is out of the camera.
2. Press "☰" button to display the menu.
3. Use "▲"or "▼" button to select this mode (🗑)
4. Use "◀"or "▶" button to select "⧉" in the lower level.
5. Press "EV/OK" button.
6. Select **"Yes"** using "◀"or "▶" button.
7. Press "EV/OK" button to delete all the images.

NOTE

Locked images cannot be deleted.

Format the internal memory

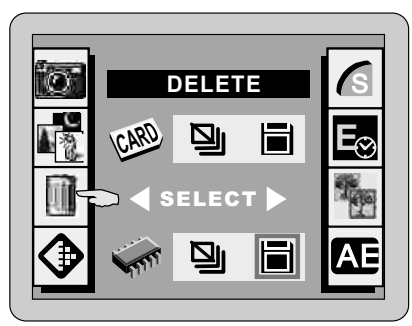

1. Make sure the SD card is out of the camera.
2. Press "☰" button to display the menu .
3. Use "▲"or "▼" button to select this mode (🗑).
4. Use "◀"or "▶" button to select "▣" in the lower level.
5. Press "EV/OK" button.
6. Select "**Yes**" using "◀"or "▶" button.
7. Press "EV/OK" button to format.

Resolution ( )

In the resolution mode, you can choose the setting **(SHQ / HQ / SQ / 6M)** according to the type of shot you want to take.

NOTE

SHQ = 2048 x 1536 pixels / Suer Fine
HQ = 1024 x 768 pixels / Fine
SQ = 640 x 480 pixels / Normal
6M = 2976 x 2240 pixels / Interpolation

1. Press "" button to display the menu.
2. Use "▲"or "▼" button to select this mode ( ).
3. Use "◀"or "▶" button to select the quality.
4. When you have finished setting, press "" button to exit.
5. The selected resolution icon will appear on the LCD monitor.

Compression Ratio (S / /)

In the compression ratio mode, you can choose the quality setting (S / /) according to the type of shot you want to take.

NOTE

S **= Super Fine**
= Fine
= Normal

1. Press "" button to display the menu.
2. Use "▲"or "▼" button to select this mode (S).
3. Use "◀"or "▶" button to select the quality.
4. When you have finished setting, press "" button to exit.

Exposure Time ( )

Using this function when you want to adjust the shutter speed.

NOTE -

1. **The settings can be adjusted to 1 second / 2 seconds / 4 seconds and turn off.**
2. **This function only work in the Night Landscape mode.**

- -

1. Press " " button to display the menu.
2. Use "▲"or "▼" button to select this mode ( )
3. Use "◀"or "▶" button to select the time.
4. When you have finished setting, press " " button to exit.

Sharpness / Softness ( )

Use this setting to emphasize (soften) the outlines of the image.

NOTE -

The settings can be adjusted in the range of -3 ~ +3.

-1~-3 = Softness

0 = Normal

+1~+3 = Sharpness

- -

1. Press " " button to display the menu.
2. Use "▲"or "▼" button to select this mode ( )
3. Use "◀"or "▶" button to select the grade.
4. When you have finished setting, press " " button to exit.

Light Metering Mode (AE)

Using this function for scenes where the brightness of the subject and background differ markedly. You can choose from 2 types of this mode.

1. Press "☰" button to display the menu.
2. Use "▲"or "▼" button to select this mode (AE).
3. Use "◀"or "▶" button to select "[ ]" or "[•]" .
4. When you have finished setting, press "☰" button to exit.

NOTE -

[ ] / Center - Average:

Averages the exposure at the center of the image. Use this mode when the subject is backlit or surrounded by bright light.

[•] / Center - Weighted:

Place more weight of the exposure at the center of the image. It is useful for subjects with strongly contrasting light and dark areas.

- -

Communication Setting ( )

The default setting is " ". The camera uses the USB DISK to download the images. When you download the images for the first time, please do this:

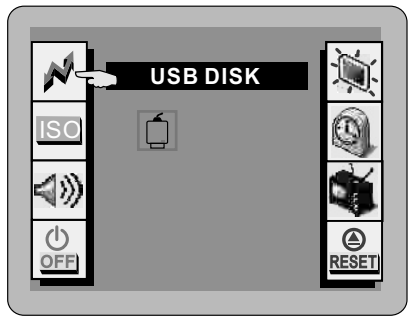

1. Press " " button to display the menu.
2. Use "▲"or "▼" button to select this mode ( ).
3. Then press "EV/OK" button to start, and **"INSERT CABLE"** will appear on the LCD monitor.

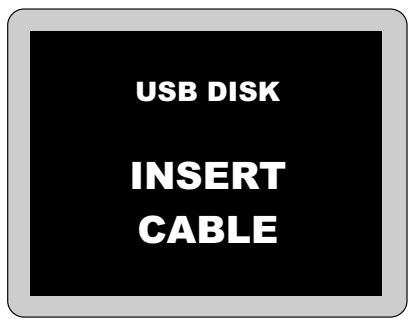

Setting the ISO (ISO)

You can change the ISO sensitivity when taking images. You can set the ISO sensitivity to Auto, ISO 50, ISO 100 or ISO 200.

1. Press " " button to display the menu.
2. Use "▲"or "▼" button to select this mode (ISO).
3. Use "◀"or "▶" button to select the ISO sensitivity (Auto, ISO 50, ISO 100 or ISO 200).
4. When you have finished setting, press " " button to exit.

Beeper On/Off (/)

In this mode, you can set the beeper on or off.

1. Press "" button to display the menu.
2. Use "▲" or "▼" button to select this mode ( ).
3. Use "◀" or "▶" button to select "" or " ".
4. When you have finished setting, press "" button to exit.

Auto Power Off ( )

Using this function when you want to get the maximum possible running time from the batteries.

NOTE -

The settings can be adjusted in 30 / 45 / 60 / 120 / 180 seconds and turn off.

- -

1.Press the "" button to display the menu.
2. Use "▲" or "▼" button to select this mode ( ).
3. Use "◀" or "▶" button to select the time.
4. When you have finished setting, press the "" button to exit.

Monitor Brightness ( )

You can adjust the monitor brightness in the range of 1~4.

NOTE -

1 = Monitor- Darker

4 = Monitor- Lightest

- -

1. Press "" button to display the menu.
2. Use "▲"or "▼" button to select this mode ( ).
3. Use "◀"or "▶" button to select the grade.
4. When you have finished setting, press "" button to exit.

Setting the Date and Time ( )

You can set the date from 5 types of this mode:

M1 = DD / MM / YY

M2 = YY / MM / DD

M3 = DD / MM / YY / HH / MM

M4 = YY / MM / DD / HH / MM

M5 = NON-DISPLAY

1. Press "" button to display the menu.
2. Use "▲"or "▼" button to select this mode ( ).
3. Use "◀"or "▶" button to select **M1** or **M2** or **M3** or **M4** type.
4. Press "EV/OK" button to setup.
5. Use "◀"or "▶" button to select the desired item and then use"▲"or "▼" button to correct the setting.
6. If you do not want the date displayed on photos select **M5**.
7. When you have finished the setting, press "EV/OK" button to return the menu.

Setting the TV System ( )

In this mode, you can set the TV system in **NTSC** or **PAL**.

1. Press "☰" button to display the menu.
2. Use "▲" or "▼" button to select this mode ( ).
3. Use "◀" or "▶" button to select **"NTSC"** or **"PAL"**.
4. When you have finished setting, press the "☰" button to exit.

Reset Definition (RESET)

You can reset all of the menu and button operation settings to the default settings.

1. Press the "☰" button to display the menu.
2. Use "▲" or "▼" button to select this mode (RESET).
3. Press "EV/OK" button to reset.
4. When you have finished setting, press "☰" button to exit.

NOTE -

Do not use the "Reset Definition" mode to confirm new settings. This mode should only be used to reset the menu to the factory default settings.

- -

Setting the Focus before Using the Self-Timer ( )

This mode only works when using the self-timer function. Before using the self-timer, you can choose from 2 types of the focus (/ , /) to take the photo.

1. Press " " button to display the menu.
2. Use "▲"or "▼" button to select this mode ( ).
3. Use "◀"or "▶" button to select " / ", " / " .
4. When you have finished setting, press " " button to exit. Now you can use the self-timer with new focus setting.

NOTE -

/ :

Using the self-timer with focus setting, then you press the "shutter" button. The camera will beep for 10 seconds. After that, the camera starts focusing and taking the photo.

/ :

Using the self-timer with focus setting, the camera will start focusing **after** you have pressed the "shutter" button. Once the focus is set, you have 10 seconds before the photo is taken.

- -

Assist Focus ( )

When the environment is too dark, it is necessary to switch on the "assist focus" feature. This feature will automatically adjust the brightness of the LCD monitor. To turn "assist focus" on or off, please do as follows:

1. Press " " button to display the menu.
2. Use "▲"or "▼" button to select this mode ( )
3. Use "◀"or "▶" button to select **"ON"** or **"OFF"**.
4. When you have finished setting, press " " button to exit.

Switching between Capture and Replay Mode

1. Press " " button to switch capture mode to replay mode.
2. In the replay mode, you can preview and zoom in on the images.

NOTE

When the memory setting is in the external SD card mode (the SD card is in the camera), you can only view or download the images stored in the SD card. If you want to view or download the images in the internal memory of the camera, please remove the SD card first (p.11).

Multi-Image Replay ( )

1. Select the image by pressing "▲","▼","◀" and "▶" button to move the white line box to the desired image.
2. You can enlarge the desired image by pressing the "EV/OK" button.Select the other enlarged images by pressing "◀" and "▶" button.

NOTE

Press the "EV/OK" button to switch between the enlarged image and multi-image replay mode.

Auto Playback

The function automatically plays all the images stored in the camera.

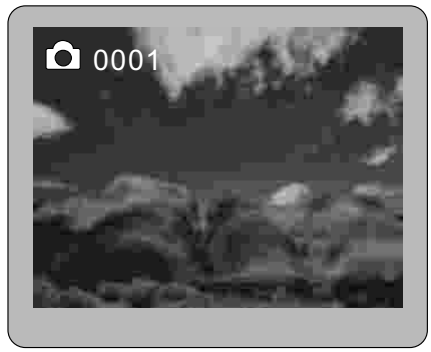

1. In single image replay, hold on "◀"or "▶" button for 2 seconds to preview the images automatically (slides show).
2. Adjust the playback speed by pressing "▲"or "▼" button.
3. Press "◀"or "▶" button to pause.
4. Press "EV/OK" button to stop this function or press "" button to go back to the capture mode.

NOTE

To playback the images slowly, press the "▼" button.

The Zoom in the Replay Mode

1. In single image replay, the displayed image can be zoomed in and out by using the **"W","T"** button.
2. Select the desired photo and press "EV/OK" button to switch to the single image replay. Press the **"W", "T"** button to magnified the image. Press the "▲","▼","◀"and "▶" button to plan the magnified image.
3. To return to the normal mode (zoom ratio=1X), press the **"W"** button.

NOTE

The zoom ratio is displayed on the LCD monitor.

Erasing the Single Image

1. In single image replay, select the image you wish to erase using "◀" or "▶" button.
2. Press the "🌷/ 🗑" button.
3. Select **"Yes"** using "◀" or "▶" button.
4. Press **"EV/OK"** button to erase the image.

Protecting Images (⊶)

In single image replay, select an image you want to protect using "◀"or "▶" button and press "⊶" button. Then the image has been locked. Press "⊶" button again to cancel the function.

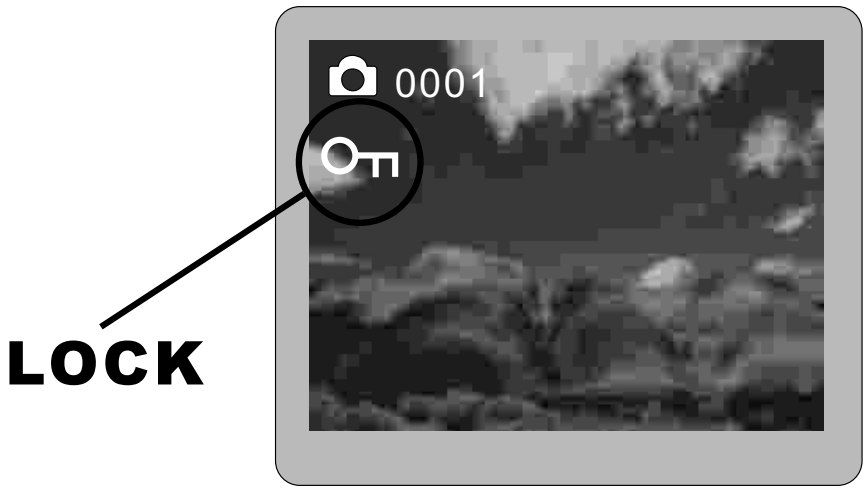

Playing Back Movies

1. In single image replay, select the movie you wish to play using "◀"or "▶" button.
2. Press the **"W"** button, the movie images will be played back. You can press the **"W"** button again to pause the movie.
3. If you want to stop during playback, press the **"T"** button.
4. Press the "◀"or "▶" button to continue view the other image.
5. You can press "" button to go back to the capture mode.

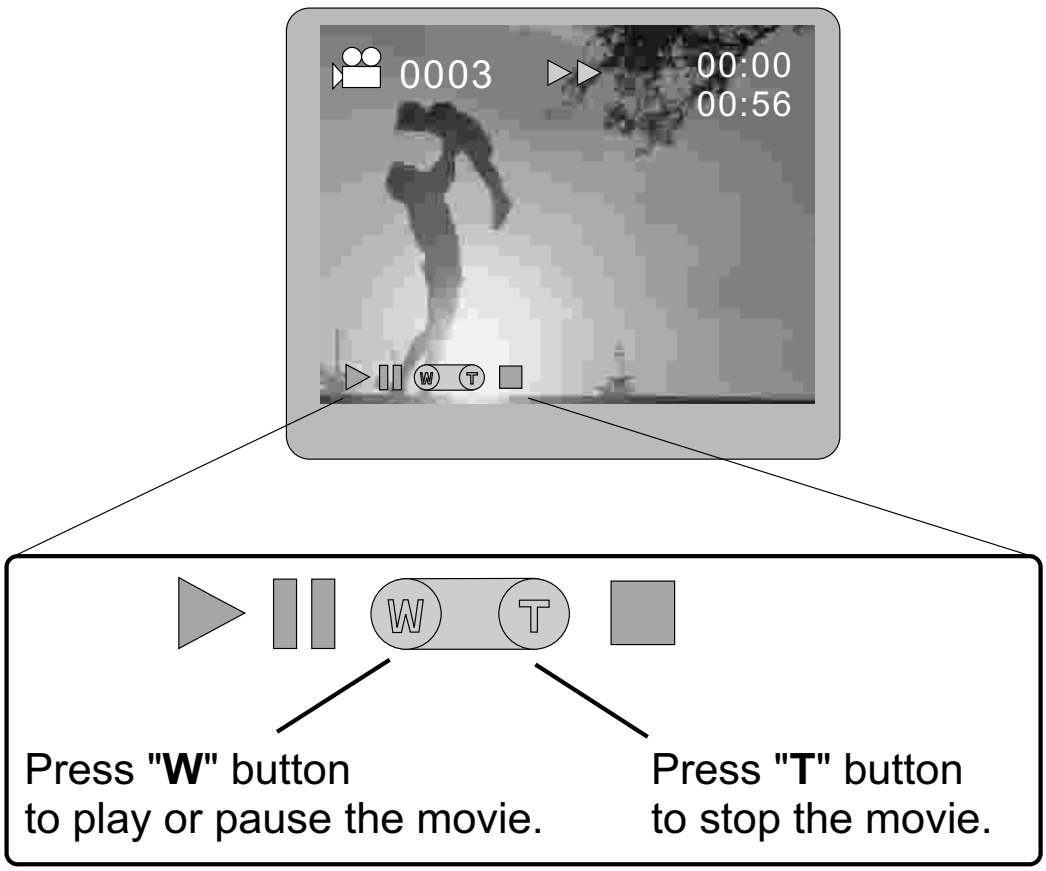

NOTE

" " is displayed on the movie image.

Connecting the Camera with a TV Monitor

1. Turn off the camera and TV.
2. Attach the Video cable to the video out terminal on the camera.
3. Plug the other end of the Video cable to the video in jack on the TV.

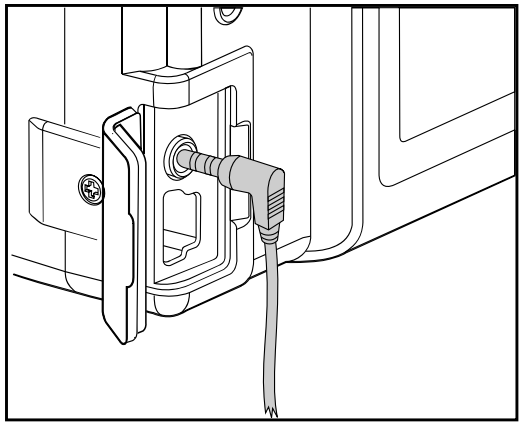

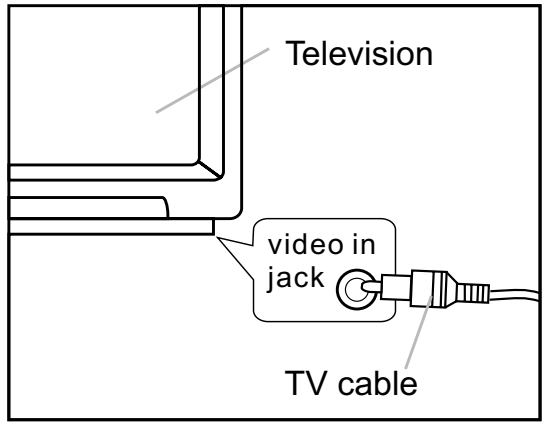

Capturing the Images with a TV Monitor

1. Make sure you have connected the camera to the TV.
2. Turn on the TV and switch it to video mode.
3. Turn on the camera in capture mode and select the type of capturing (p.19).
4. Shooting or recording the images.

NOTE

If an incorrect TV system is set, the output image will not display properly. Please set the TV system correctly (p.30).

Replaying the Images with a TV Monitor

1. Make sure you have connected the camera to the TV.
2. Turn on the TV and switch it to video mode.
3. Turn on the camera in replay mode (p.32).
4. In the replay mode, you can preview and zoom in on the images.

NOTE

If an incorrect TV system is set, the output image will not display properly. Please set the TV system correctly (p.30).

7. Installing the USB DISK Driver

For Windows 98 only

If you have Windows 98 operating system on your PC, please place the CD-ROM into the appropriate drive, then install the USB DISK driver (msd98_setup.exe) to your computer. If your operating system is Windows 2000/ME/XP, you do not need to install any driver.

1. Click **"Install USB disk driver"** on the autorun screen.

2. Click **"Next"** on the Welcome screen.

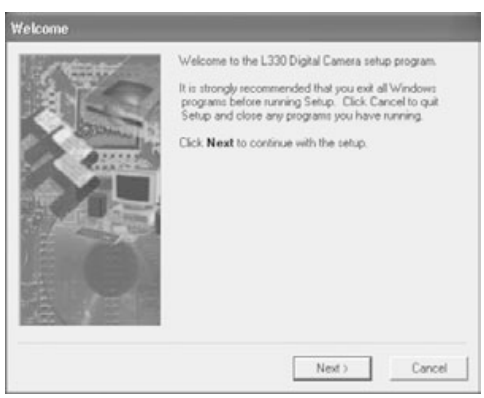

3. The files will begin to copy to your computer.

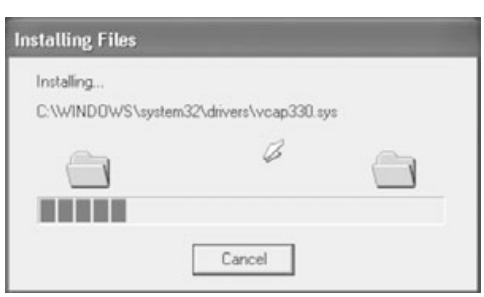

4. Click "**Finish**" to end the setup.

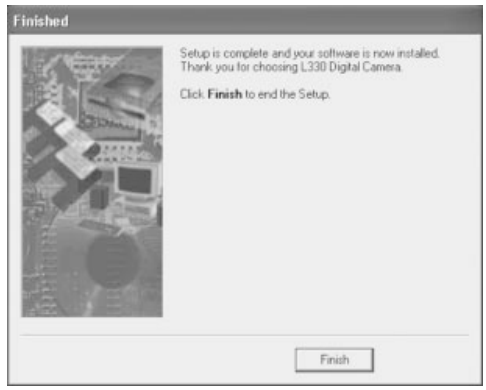

5. In order for the driver to take effect, you should click "**OK**" to restart your computer now.

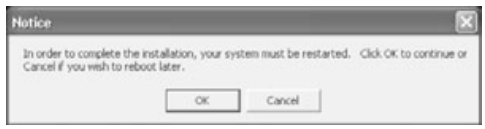

8. Download Images via USB DISK

1. Switch the camera to the **Communication Setting** mode and press the "EV/OK" button. The LCD monitor will show"**INSERT CABLE**" (p. 27).

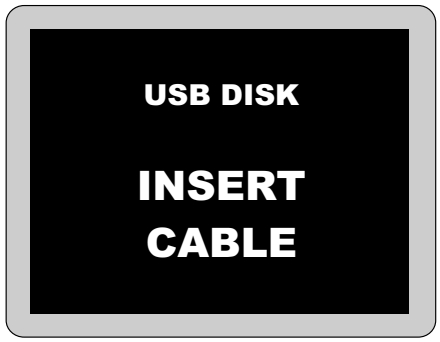

NOTE

Make sure you have installed the driver first, If you have Windows 98 operating system on your PC.

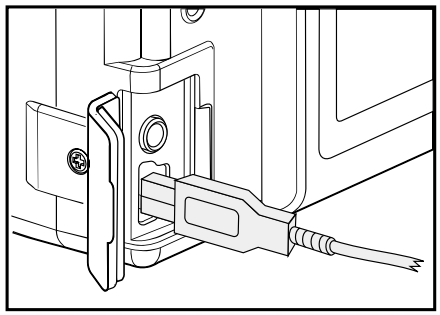

2. Attach the USB cable to the USB terminal on the camera.

3. Plug the other end of the USB cable to the USB port on the PC.

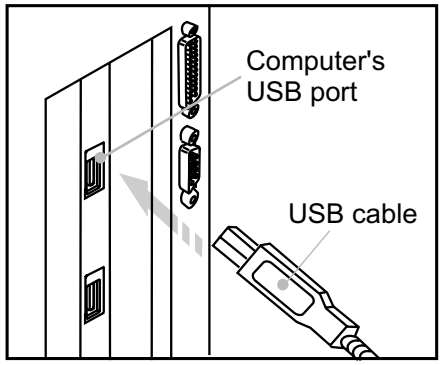

4. After a moment, Windows will find new hardware, and install the driver automatically. You will find the images as follows:
   My computer / Removable Disk / DCIM / 100IMAGE

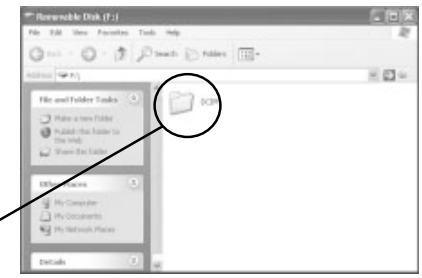

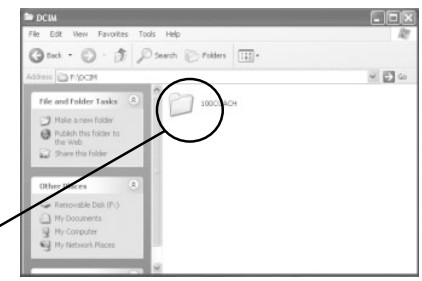

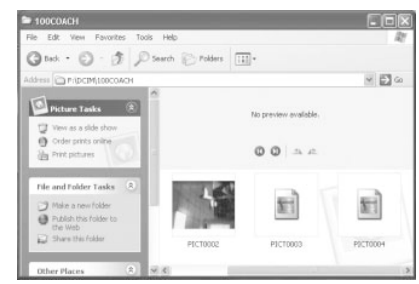

NOTE -

When the memory setting is in the external SD card mode (the SD card is in the camera), you can only view or download the images stored in the SD card. If you want to view or download the images in the internal memory of the camera, please remove the SD card first (p. 11).

- -

Troubleshooting

	Symptom	Check this	Remedy
Power supply	Power will not turn on	Battery level too low	Replace with new batteries
		Batteries inserted incorrectly	Insert the batteries correctly
	Power turns off right after turning on	Battery level too low	Replace with new batteries
Shooting the pictures	Cannot take a picture even if pressing the shutter button	Power supply not on	Turn power on
		No space on the SD card	Delete unwanted files or insert a new card
		The camera is not set to capture mode	Set to capture mode Insert a new card
		End of SD card service life	Insert a new card

	Symptom	Check this	Remedy
Shooting the pictures	Cannot focus	Subject is not in the center	Move the subject to the center
	Doesn't Flash	Flash is set to "" mode	Change flash mode to "" or ""
		Capture mode is set to "", "" mode	Switch capture mode to "" mode
		Battery is exhausted	Replace with new batteries
	Image appears dark	Distance too great, the flash did not reach the subject	Move closer to subject
Play back	Cannot playback image or playback screen will not appear	Mode is not set to ""	Set to "" mode
		No image data or the data is erased	Take photos
		SD card is not inserted or does not contain any files	Take photos
		SD card is not formatted with this camera	Format the SD card with this camera (p. 22)

	Symptom	Check this	Remedy
Play back	Cannot delete the image	Image is protected	Unlock this image (p.34)
Other	No image on TV screen	Incorrect video system setting	See p.30

Technical Specifications

Sensor Resolution

2145 x 1560 CCD sensor with 3.34M pixels

Image Resolution

Still Mode:

2048 x 1536; 1024 x 768; 640 x 480 pixels

2976 x 2240 (Interpolation) pixels

Video Clip: 320 x 240 pixels

Lens

f=6~12/24mm (2 x Optical Zoom / 2X Digital Zoom)

Focus Range

15.7 inches (0.4m) to infinity

Focus Range-Macro Mode

2.4~15.7 inches (0.06~0.4m)(macro mode)

Shutter

Electronic shutter, Mechanical shutter

Strobe / Auto Exposure / Continuous Shots

Yes

Video-Out

Live / Still (Preview)

Interface

Mini USB

LCD Display

TFTLCD (1.5")

Protocol

Mass storage

Technical Specifications

Self Timer

10 seconds

Image Type

JPEG

Image Capacity

SD card/ Internal 8 MB flash memory

Power Source

USB 5V / AA alkaline batteries x 2

Power Saving

Automatically power off after 30/ 45 / 60 /120/180 seconds

Dimensions

3.99"(W) x 2.17"(H) x 1.44" (D) ;
101.3 x 55 x 36.8 mm

Weight

138 g (without batteries & SD card)

System Requirements for PC

1. Windows 98 / ME / 2000 / XP
2. A Pentium, Pentium II or higher PC, or compatible computer with MMX
3. A hard disk with at least 200 MB space available to run the program
4. At least 64 MB of RAM (128 MB recommended)
5. Built-in USB port

System Requirements for MAC

1. OS 9.1 or above
2. USB connector (1.1 compliant)

Maintenance and Storage

- Stop operating the camera immediately if it emits smoke or noxious fumes. Immediately turn the camera's power off, remove the camera battery. Continued use of the product may result in fire or electrical shock.
- Do not dismantle, modify or repair the camera yourself. File and/or electrical shock may occur as a result
- Do not allow the camera to come into contact with, or become immersed in, water or other liquids. The camera has not been waterproofed. If the exterior comes into contact with liquids or salt air, wipe it dry with a soft, absorbent cloth.
- Do not drop or insert metal objects or combustible items inside the camera. Fire and/or electrical shock may occur as a result.
- Do not directly look at the sun through the viewfinder or use the flash near eyes. Eye injury may occur as a result.
- Do not use or store this camera in environments of direct sunlight, high humidity and dusty places, next to air conditioner, electric heater or other heat sources, in a closed car,.....etc.
- Do not use organic solvents, such as alcohol, to clean the camera, if the lens or viewfinder are diry, use a lens brush or soft cloth. Never use your fingers.
- To prevent electrical shock, do not attempt to disassemble or repair the camera. Water may cause fire or electric shock, store in a dry place.
- Usage environment / temperature: 0 to 40 degrees celsius
  Usage environment / relative humidity: 45% ~80%

MEMO

MEMO

FCC NOTICE

This equipment has been tested and found to comply with the limits for a Class B digital device, pursuant to Part 15 of the FCC Rules. These limits are designed to provide reasonable protection against harmful interference in a residential installation. This equipment generates, uses, and can radiate radio frequency energy and, if not installed and used in accordance with the instructions, may cause harmful interference to radio communications.

However, there is no guarantee that interference will not occur in a particular installation. If this equipment does cause harmful interference to radio or television reception, which can be determined by turning the equipment off and on, the user is encouraged to try to correct the interference by one or more of the following measures:

- Reorient or relocate the receiving antenna.
- Increase the separation between the equipment and receiver.

Changes or modifications not expressly approved by Oregon Scientific for compliance could void the warranty and your authority to use this equipment.